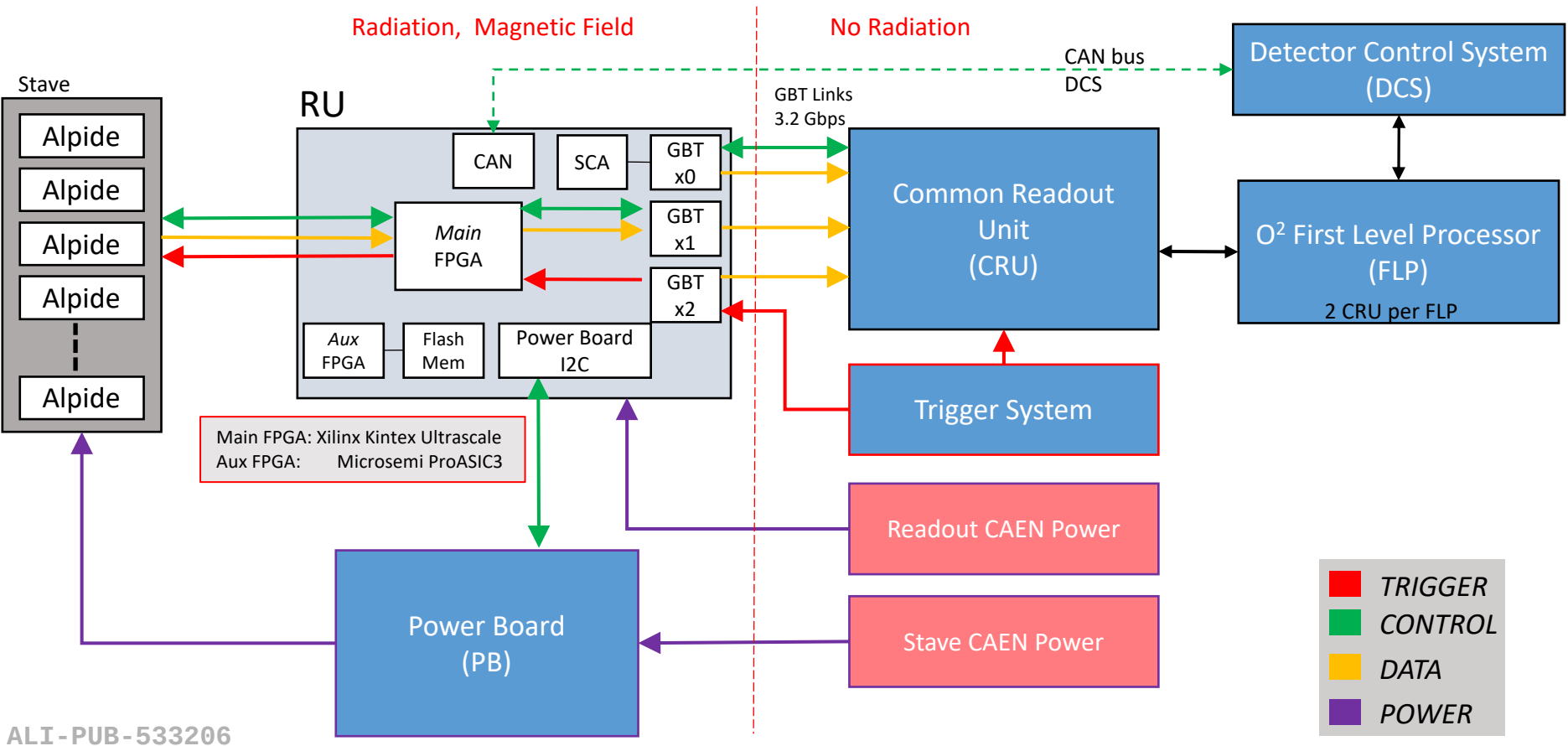
Radiation, Magnetic Field
No Radiation
CAN bus
DCS
Detector Control System (DCS)
Stave
Alpide
Alpide
Alpide
Alpide
Alpide
RU
CAN
SCA
GBT x0
GBT x1
GBT x2
Main FPGA
Aux FPGA
Flash Mem
Power Board I2C
GBT Links 3.2 Gbps
Common Readout Unit (CRU)
O² First Level Processor (FLP)
2 CRU per FLP
Trigger System
Main FPGA: Xilinx Kintex Ultrascale
Aux FPGA: Microsemi ProASIC3
Readout CAEN Power
Power Board (PB)
Stave CAEN Power
TRIGGER
CONTROL
DATA
POWER
ALI-PUB-533206